2kW BLDC Motor (2000w 48v/60v)

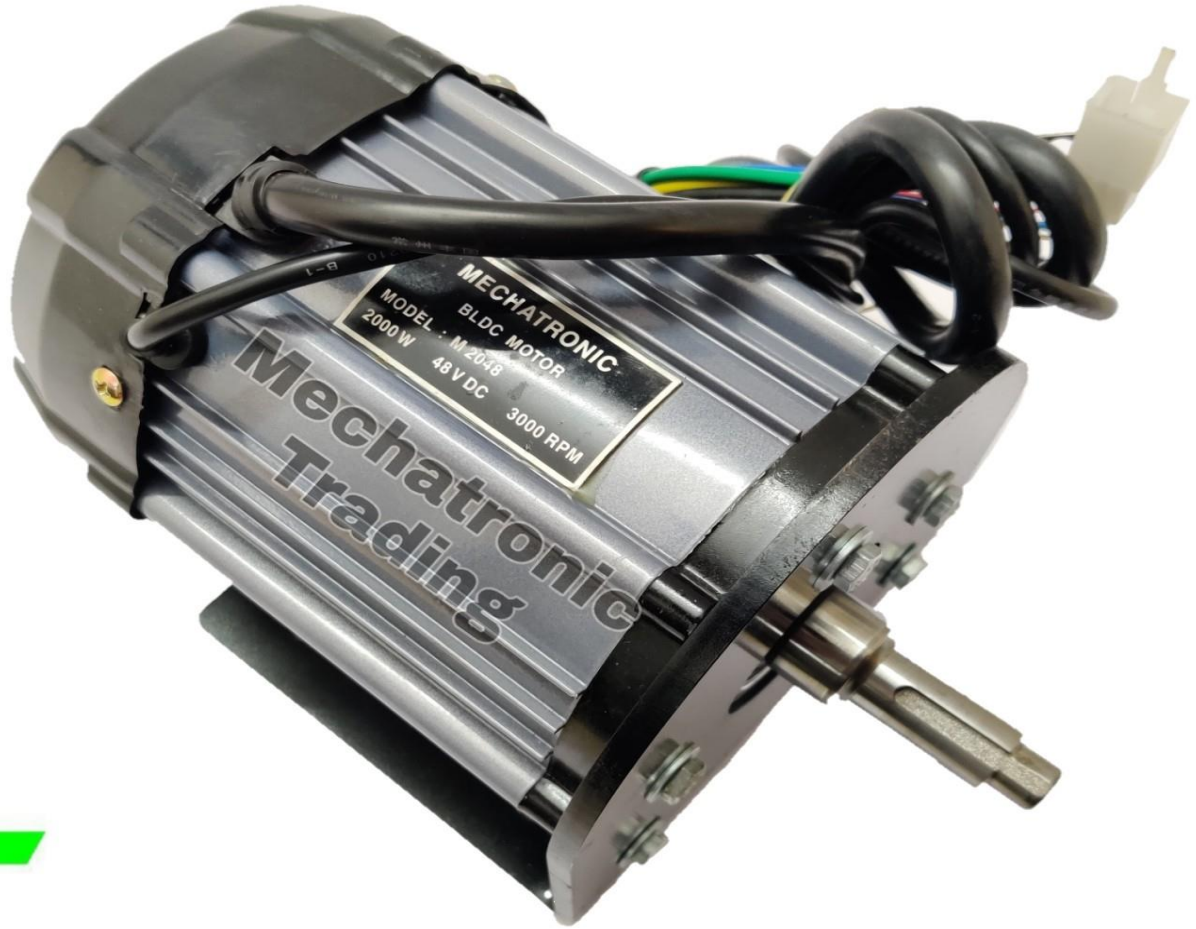

Mechatronic Trading

Mechatronic Trading

2kW BLDC Motor Specifications (2000w 60v)

- Type: Permanent Magnet BLDC
- Voltage (Volts): 60
- No load Current (Amperes):- 3.5
- Rated Current (Amperes): 50
- Peak Current (Amperes): 70
- Rated Speed (RPM) : 3300
- Rated Torque (Nm) : 7.6
- Max Output Torque (Nm) : 31
- Rated Power (W): 2000
- Max Output Power (W): 3000
- Efficiency (η): >87% on full load and full rpm
- Protection class: IP 67
- Motor weight (kg): 5.8
- Insulation class: B
- No of Rotor poles:- 8
- No of Stator poles:- 12
- Star connected windings for higher torque
- Winding wire guage (AWG):- 26 (Copper with B class insulation)
- Operating Temperature (℃):- -20 to 80
- Hall Sensor arrangement:- (Three sensors at 120 electrical degrees)
- Type:- Bipolar Hall Effect Digital Position Sensor IC (SS41)
- Wide operating Voltage Range (Volts):- 4.5 to 24
- Very low current consumption (Mille Amperes):- 20
- Operating Temperature (℃):- -40 to 150

Mechatronic Trading

Mechatronic Trading

2kW BLDC Motor Features (2000w 60v)

- High Efficiency & High torque
- Quite operation (or low noise) due to absence of brushes
- High Precision & High Speed
- High power to weight ratio
- Splash Proof
- Smaller motor geometry
- Forced Air cooling for higher heat dissipation
- Optimal current consumption
- Long life as no inspection and maintenance is required for commutator system
- Low hysteresis loss material used (Silicon steel)
- High power Neodymium Magnet
- Sealed high quality bearing used
- Hardened Shaft with keyway slot
- High quality heavy duty multi-stranded (53 strand) wire used
- High temperature resistive coated wires used
- Air gap – 1mm
- It has no mechanical commutator and associated problems
- High speed of operation even in loaded and unloaded conditions due to the absence of brushes that limits the speed
- No lubrication required
- Higher dynamic response due to low inertia
- Less electromagnetic interference

Mechatronic Trading

2KW 60V MOTOR TEST PARAMETERS

Sr No	Voltage (V)	Current (A)	Speed (RPM)	Torque (Nm)	Power (W)
1	63.5	3.5	3200	0.07	88.9
2	63	6.4	3186	0.86	182.88
3	62.5	10.5	3175	1.76	393.75
4	62	14.1	3170	2.56	611.94
5	61.5	19.9	3162	2.92	917.88
6	61	23.3	3145	3.56	1137
7	60.5	29.2	3125	3.86	1413
8	60	34.6	3109	4.77	1764
9	59.5	39.1	3095	5.06	1977.4
10	59	42.3	3081	6.72	1996
11	58.5	46.2	3060	7.6	2162

MOTOR DIMENSIONS

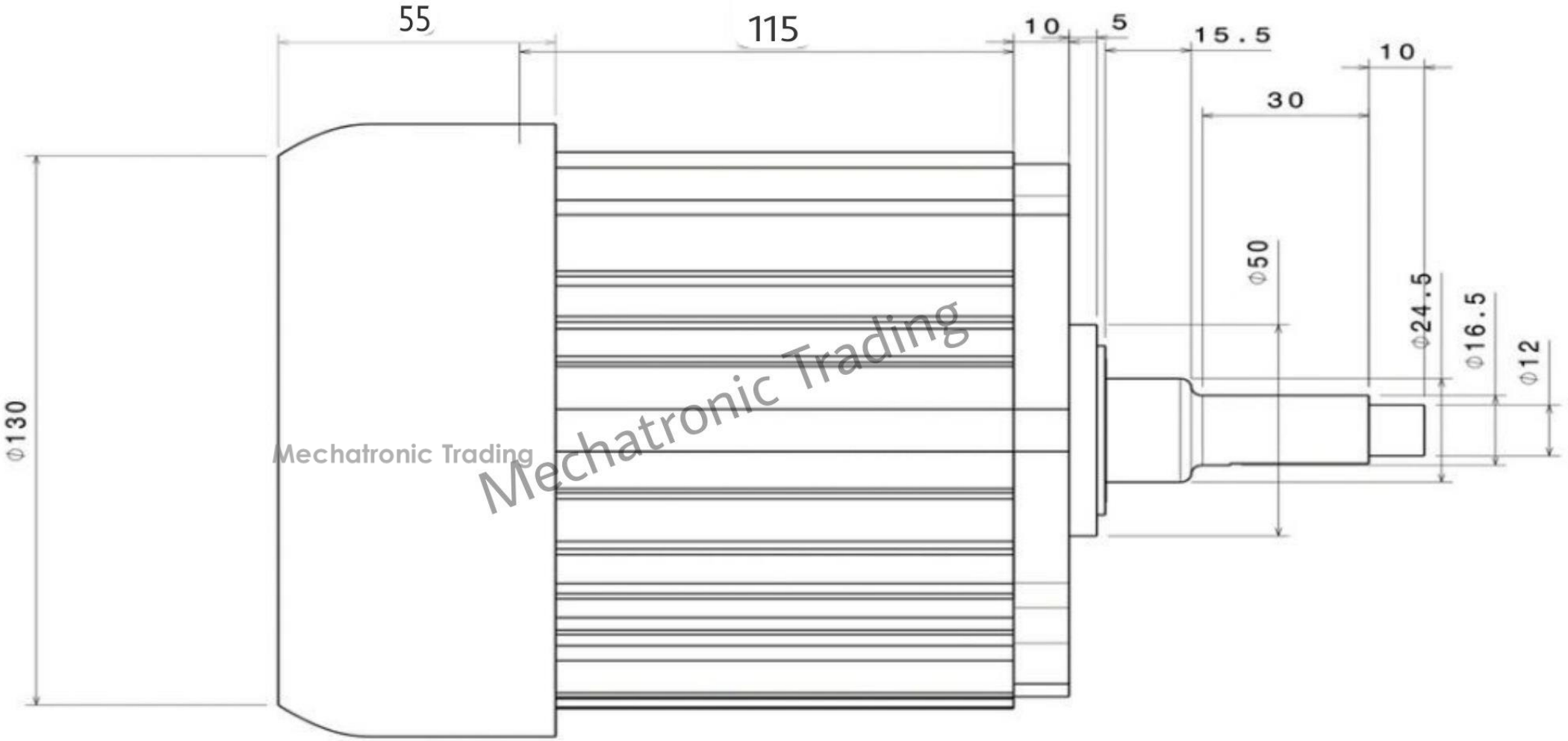

Weight - 5.8 kg

Left view
Scale: 1:1

Mechatronic Trading
Mechatronic Trading
Mechatronic Trading
Mechatronic Trading

MOTOR DIMENSIONS

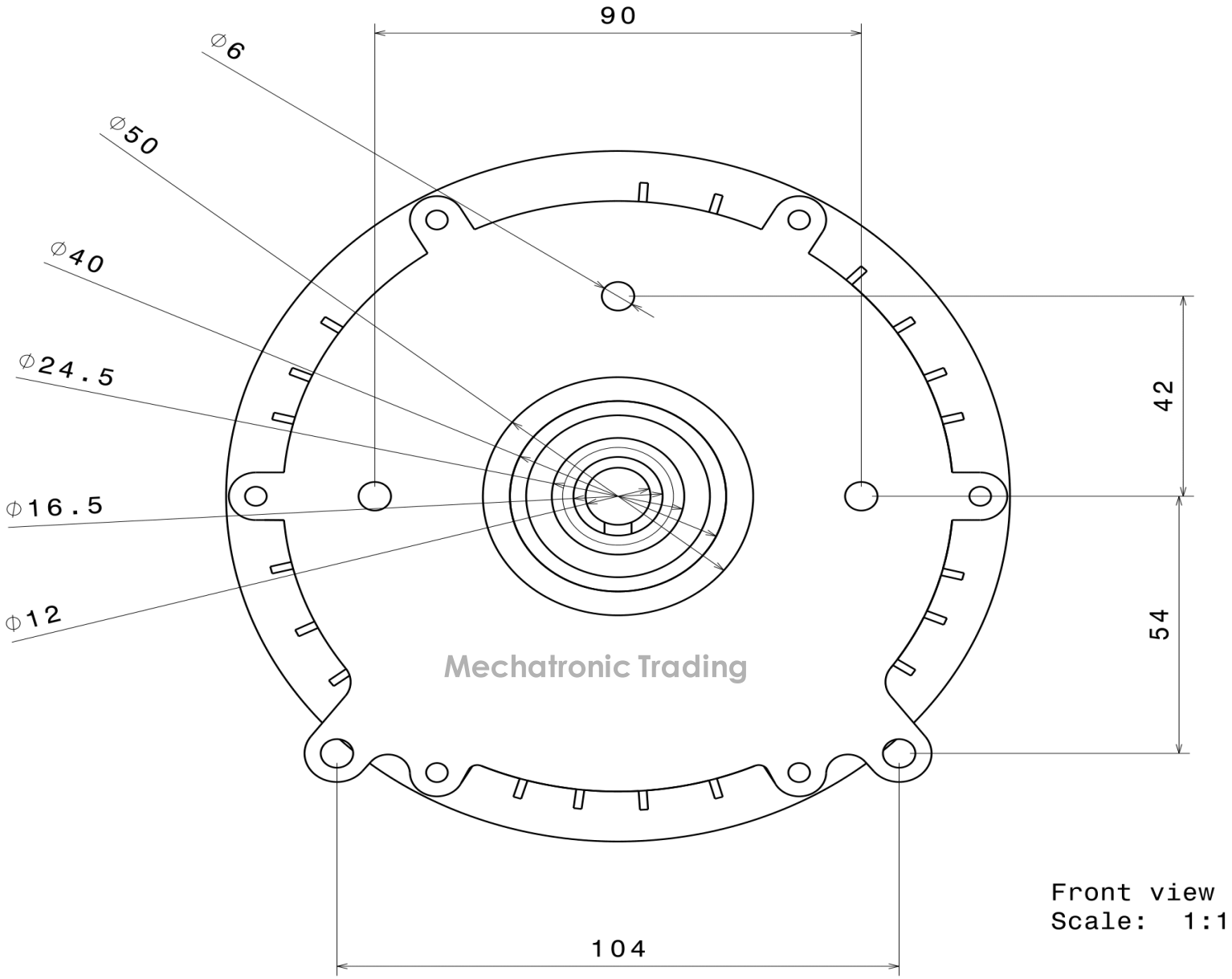

Mechatronic Trading

Mechatronic Trading

HEAVY DUTY BLDC MOTOR CONTROLLER (48V/60V)

Heavy Duty Intelligent Controller

Mechatronic Trading

Mechatronic Trading

BLDC MOTOR CONTROLLER SPECIFICATION

- Motor type:- Brushless DC Motor (BLDC Motor)
- Rated DC Voltage (Volts):- 48/60
- Over Voltage Cut-off (Volts):- 58/72
- Under Voltage Cut-off (Volts):- 41/52
- Commutation Angle (Degrees):- 120
- Rated Power (Watts):- 3000
- Rated Current (Amperes):- 50
- Operating Temperature (℃):- -20 to 80
- Protection Class:- IP 33
- Brake De-energize: High
- Throttle voltage: 1V to 4.5V

Number of Mosfets :- 24

Heavy Duty Mosfet with the following features:-

- Type of Mosfets :- N-Channel Mosfet (**SKD502T**)
- VDSS (Drain Source Voltage) (Volts):- 85
- Maximum Junction Temperature(℃):- 150
- Id (Continuous Drain Current) (Amperes):- 120
- Maximum power dissipation (Watts):- 174
- Operating Temperature (℃):- -55 to 150
- Braking Type:- High level Braking

Mechatronic Trading

Mechatronic Trading

BLDC MOTOR CONTROLLER FEATURES

- Speed limiting
- Anti-theft Protection
- Three Speed Mode
- Rotation Direction Reversing Functionality
- Reverse at half speed
- Hard start / Soft start feature
- Speed output for digital Meter
- Ignition Lock Facility for On and Off
- Compatible Batteries- SMF, Automotive, Tubular batteries, Lithium batteries.
- Heavy Duty Aluminium Heat Sink for better heat dissipation
- Dimensions (L*W*H) (mm):- 270* 130 * 70
- Weight (Kgs):- 1.5

Protections :-

- Over Heat Protection
- Battery low and high Voltage protection
- Over Current Protection
- Throttle error protection
- Hall sensor failure protection
- Fault detection led indicators for motor, controller, throttle and overload.

Mechatronic Trading
Mechatronic Trading

MOTOR CONTROLLER DIMENSIONS

Weight - 1.5 kg

Mechatronic Trading

Mechatronic Trading

MECHATRONIC TRADING

ADDRESS:- SR. NO 259, PLOT NO 3/1B/1, VIKAAS NAGAR COLONY, KALWAD, LOHEGAON, PUNE, MAHARASHTRA- 411032

TEL :- +919763025510 / +919511798364

MAIL US :- MECHATRONIC.TRADING@GMAIL.COM

VISIT :- HTTP://WWW.INDIAMART.COM/MECHATRONIC-TRADING/

HTTPS://WWW.YOUTUBE.COM/CHANNEL/UC4I4TQLJKULY5G_M1D8ZTGW/VIDEOS

HTTPS://WWW.FACEBOOK.COM/MECHATRONICTRADING.INDIA/

REVIEWS :- HTTPS://BIT.LY/2VG6RPM

HTTPS://INSTAGRAM.COM/MECHATRONIC.TRADING?IGSHID=OGQ2MJDIOTE=

HTTPS://WA.ME/MESSAGE/W3ASOZWW5KPAA1